REVISIONS				
LTR	ZONE	DESCRIPTION	DATE	APPROVED
		SEE SHT #1		

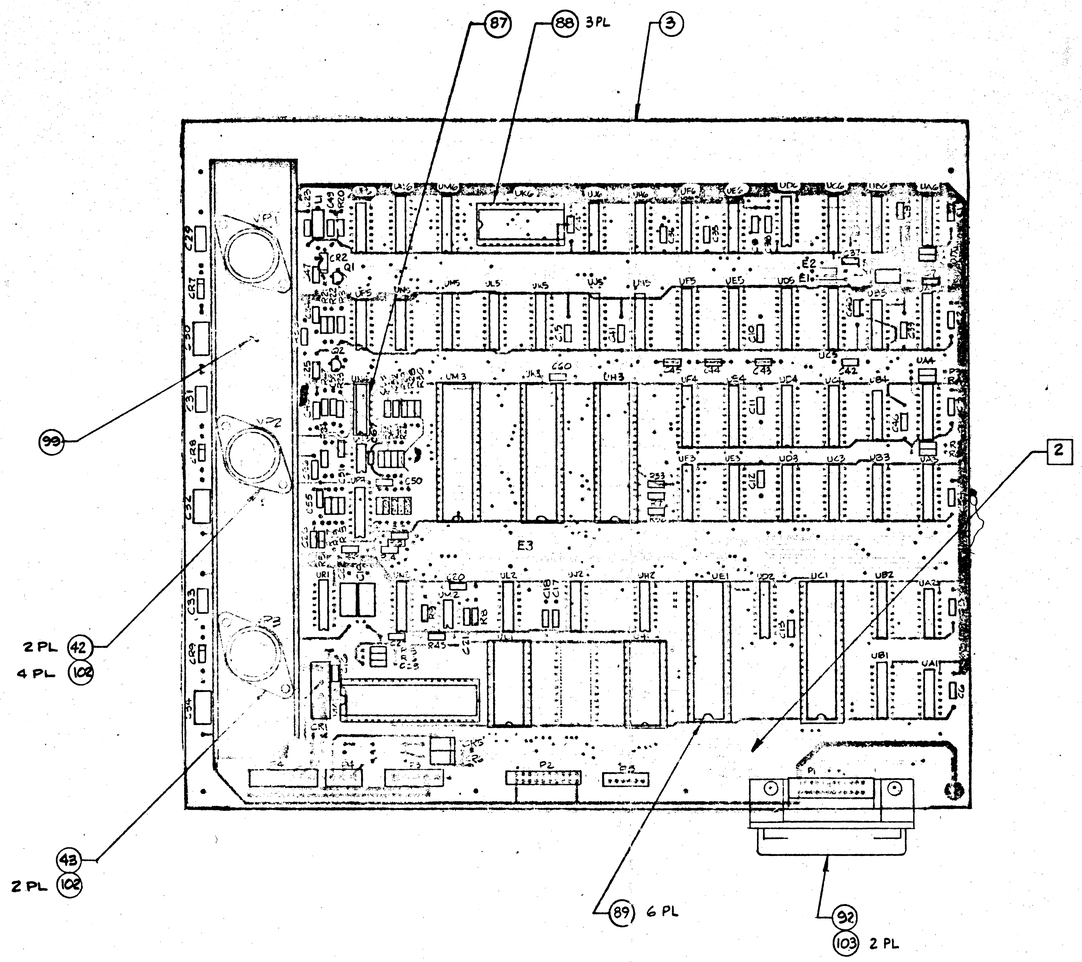

Parts

-01 SHOWN

UNLESS OTHERWISE SPECIFIED TOLERANCES ON DECIMALS .X ±.3 .XX ±.08 .XXX ±.13 ∠ ±3°	DRAWN BY M. AMES	DATE	commodore
	CHKD.		P.C.B. ASSY, FLOPPY DIGITAL
	ENGR		
	APPR		
MATERIAL	USED ON 8050	NEXT ASSY 8050010	SIZE D 8050002 REV H
FINISH			SCALE NONE SHEET 5 OF 5

BISHOP GRAPHICS/ACCUPRESS
REORDER NO. A-1277

REVISIONS				
LTR	ZONE	DESCRIPTION	DATE	APPROVED
A		PRODUCTION RELEASE		
B		REV PER ECO #1595		
C		REV PER ECO 1774		
D		REV PER ECO 1871		

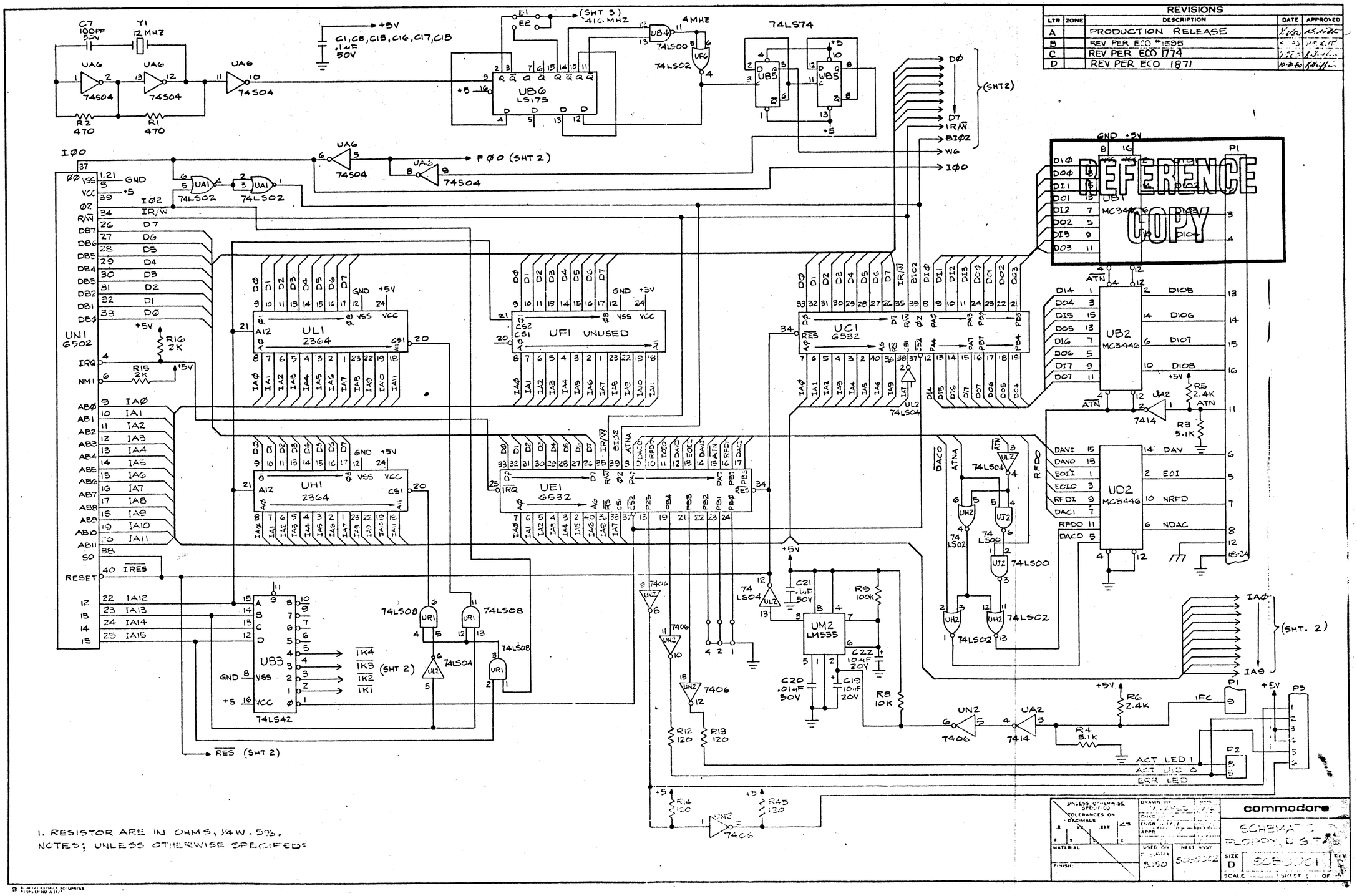

1. RESISTOR ARE IN OHMS, 1/4W. 5%.

NOTES; UNLESS OTHERWISE SPECIFIED:

UNLESS OTHERWISE SPECIFIED TOLERANCES ON DECIMALS

MATERIAL

FINISH

DRAWN BY

CHKD

ENGR

APPR

DATE

USED ON

NEXT ASSY

commodore

SCHEMATIC FLOPPY DISK

SIZE D

SCALE

SHEET OF

REV D

REVISIONS				
LTR	ZONE	DESCRIPTION	DATE	APPROVED

Gerät	Laufwerk Hersteller	Laufwerk Typ	Partnummern der Leiterplatten Laufwerk	Analog	Digital	DOS Version	ROM 2364 (EPROM 2564)	Pos.	ROM 2364 (EPROM 2564)	Pos.	Controller PIA 6530 (Adapter)	Pos.	Decoder ROM 6316 (EPROM 2516)	Pos	Jumper E3 + UK3/18 (E3+UAB3/18)
8050 T	Tandon	174003-002	8050047-01	8050044	8050002-02	2.5 2.7	901482-07 901887-01	UL1	901482-06 901888-01	UH1	901483-04 901884-01	UK3	901467-01	UK6	nein
8250 T			8250015-01	8050044	8050002-03	2.7	901887-01	UL1	901888-01	UH1	901884-01	UK3			ja
8050	Micropolis	1006-II	8050031-01	8050006 8250023	8050002-01	2.5 2.7	901482-07 901887-01	UL1	901482-06 901888-01	UH1	901483-03 901885-04	UK3			nein
8250		1006-IV	8250016-01	8250023	8050002-04	2.7	901887-01	UL1	901888-01	UH1	901885-04	UK3			ja
8050	Micropolis	1106-II	8050039-01	8250023	8050002-01	2.5 2.7	901482-07 901887-01	UL1	901482-06 901888-01	UH1	901483-03 901885-04	UK3			nein
8250		1106-IV		8250023	8050002-04	2.7	901887-01	UL1	901888-01	UH1	901885-04	UK3			ja
8050	MPI	101 S (0) 101 S (1)	8050059-01 8050059-02	8250023	8050002-05	2.7	901887-01	UL1	901888-01	UH1	901869-01	UK3			nein
8250		102 S (0) 102 S (1)	8250029-01 8250029-02	8250023	8050002-06	2.7	901887-01	UL1	901888-01	UH1	901869-01	UK3	901467-01	UK6	ja
8250 lp	Matsushita	JU-570	251091-01			2.7	251166-01	UA13	251165-01	UA11	901885-04	UAB3	251167-01	UC1	ja
				250404-01	250402-02	2.7	251166-01	UA13	251165-01	UA11	Adapter 250414-02 mit EPROM 2716 251474-01A	UAB3	251167-01	UC1	ja
				250404-01	250402-01	2.7	901887-01	UA13	901888-01	UA11	901869-01	UAB3	901467-01	UC1	ja
SFD 1001	Matsushita	JU-570-2	251091-02	——	250416-03	2.7	901887-01	1J	901888-01	3J	Adapter 250414-01 mit EPROM 2516 251257-02	3E	901467-01	5C	ja

PRELIMINARY

UNLESS OTHERWISE SPECIFIED TOLERANCES ON: DECIMALS .X ± .XX ± .XXX ± ∠'S ±	DRAWN BY:	DATE	commodore
	CHKD: Arndt	8.12.83	8050 / 8250 System overview
	ENGR:		
	APPR:		
MATERIAL:	USED ON	NEXT ASSY	SIZE B / REV
FINISH:			SCALE / SHEET 1 OF 2

1715 Gebr. Widmann

REVISIONS				
LTR	ZONE	DESCRIPTION	DATE	APPROVED
.		SEE SHT. 1		

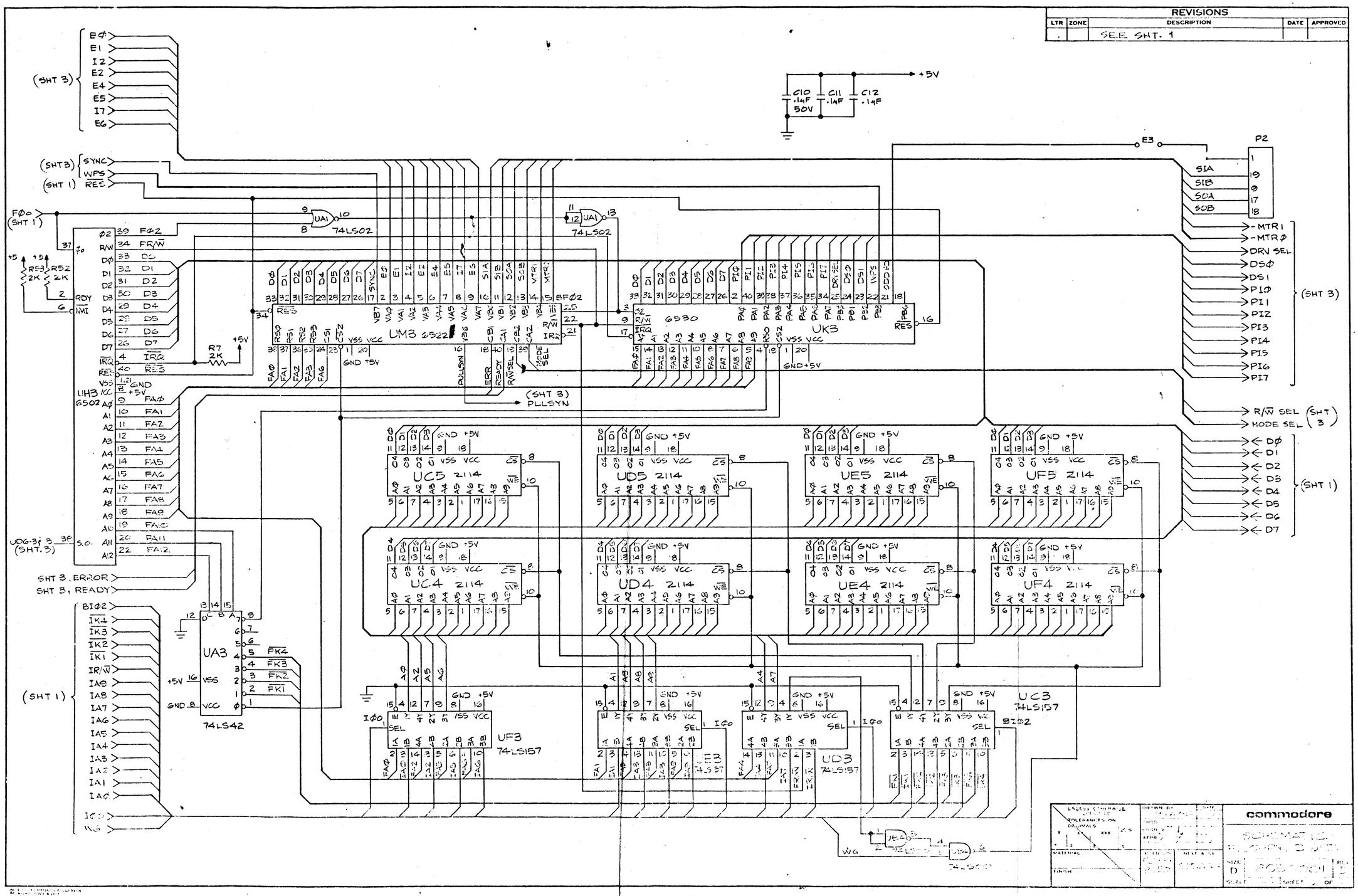

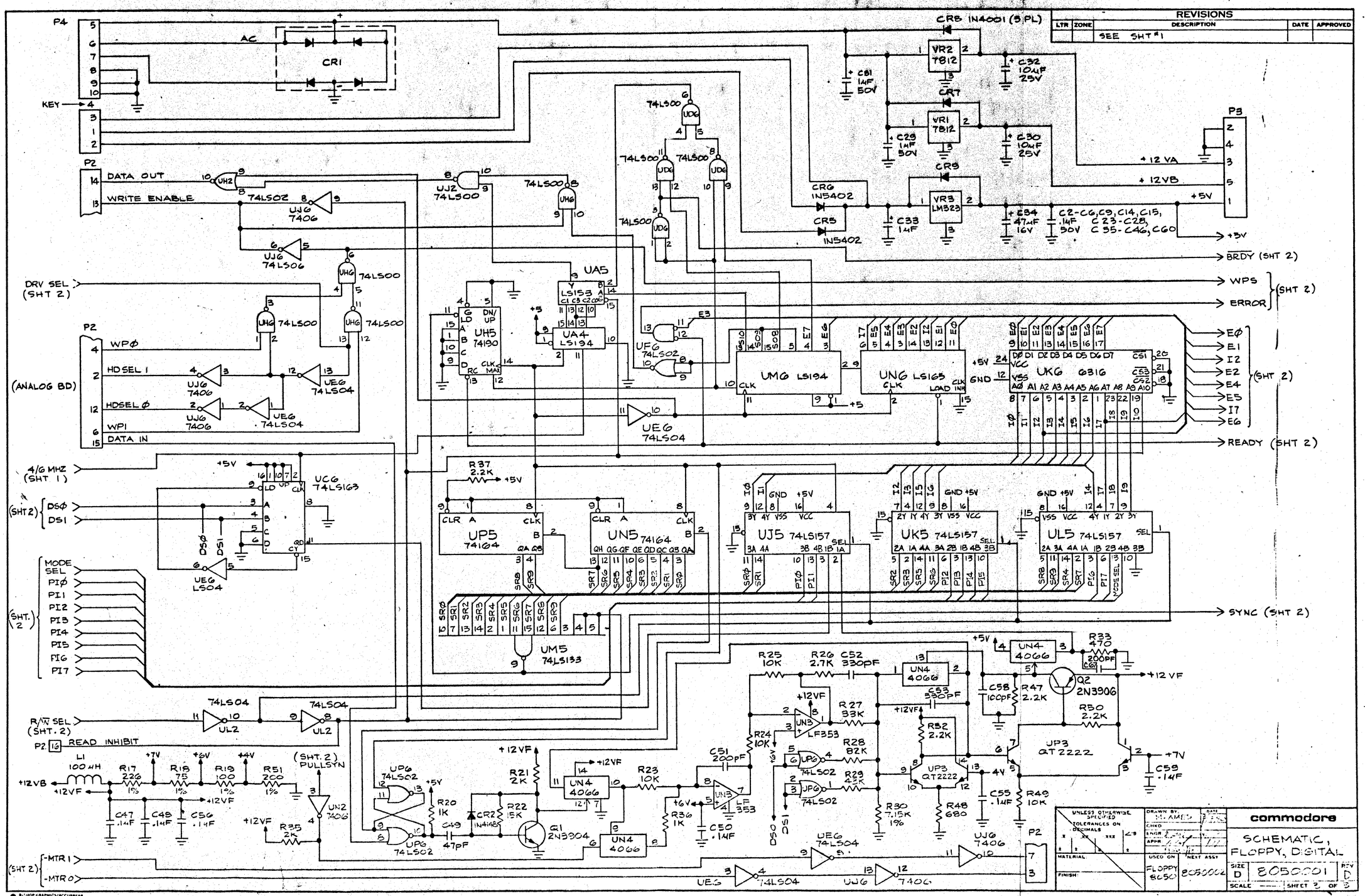
REVISIONS
LTR ZONE DESCRIPTION DATE APPROVED
SEE SHT #1
P4
KEY
AC
CR1
CR8 1N4001 (3 PL)
VR2 7812
VR1 7812
VR3 LM323
C61 1µF 50V
C29 1µF 50V
C32 10µF 25V
C30 10µF 25V
C33 1µF
C34 47µF 16V
C2-C6, C9, C14, C15, C23-C28, C35-C46, C60
CR6 1N5402
CR5 1N5402
P3
+12 VA
+12 VB
+5V
P2
DATA OUT
WRITE ENABLE
UJ6 7406
74LS02
74LS06
74LS00
UJ2 74LS00
UH6
UDG
DRV SEL (SHT 2)
WPS
ERROR
(SHT 2)
BRDY (SHT 2)
UA5 LS153
UA4 LS194
UH5 74190
UF6 74LS02
UMG LS194
UNG LS165
UKG 6316
E0
E1
I2
E2
E4
E5
I7
E6
READY (SHT 2)
(ANALOG BD)
WPØ
HDSEL 1
HDSEL Ø
WPI
DATA IN
UJ6 7406
UE6 74LS04
4/6 MHZ (SHT 1)
UC6 74LS163
DSØ
DS1
UE6 LS04
R37 2.2K
UP5 74164
UN5 74164
UJ5 74LS157
UK5 74LS157
UL5 74LS157
UM5 74LS133
MODE SEL
PIØ
PI1
PI2
PI3
PI4
PI5
PI6
PI7
SYNC (SHT 2)
R/W SEL (SHT. 2)
UL2
READ INHIBIT
L1 100µH
R17 220 1%
R18 75 1%
R19 100 1%
R51 200 1%
+12VB
+12VF
C47 .1µF
C48 .1µF
C56 .1µF
UN2 7406
R35 2K
(SHT. 2) PULLSYN
UP6 74LS02
R20 1K
C49 47pF
CR2 1N4148
R21 2K
R22 15K
Q1 2N3904
UN4 4066
R23 10K
R36 1K
C51 200pF
C50 .1µF
UN3 LF353
R25 10K
R26 2.7K
C52 330pF
R24 10K
R27 33K
R28 82K
R29 43K
R30 7.15K 1%
C53 330pF
R52 2.2K
UP3 QT2222
R48 680
C55 .1µF
R49 10K
R47 2.2K
C58 100pF
R33 470
200PF
Q2 2N3906
R50 2.2K
C59 .1µF
+7V
-MTR1
-MTR0
UNLESS OTHERWISE SPECIFIED TOLERANCES ON DECIMALS
MATERIAL
FINISH
DRAWN BY M. AMES
CHKD
ENGR
APPR
USED ON FLOPPY 8050
NEXT ASSY 8050002
commodore
SCHEMATIC, FLOPPY, DIGITAL
SIZE D 8050001 REV D
SCALE
SHEET 2 OF 3

QUANTITY REQD PER PART/ DASH NO. 0302-01	ITEM	DS	PART NUMBER	DESCRIPTION	REF DES	BEND	NOTES
REF REF	1		8050001	SCHEMATIC - FLOPPY, DIGITAL			
1	2		901887-01	2364-118	UL1		
1 1	3		8050003	PC FABRICATION - FLOPPY, DIGITAL			
1	4		901888-01	2364-119	UH1		
2 2	5		901435-01	LSI 6502 MPU	UN1, UH3		
1 1	6		901437-01	LSI 6522 VIA	UM3		
- -	7		901483-03	LSI 6530 PIA	UK3		
2 2	8		901458-01	LSI 6532 PIA	UC1, UE1		
1 1	9		901467-01	LSI 6316 ROM	UK6		
- 1	10		901482-07	LSI 2364 ROM	UL1		
- 1	11		901482-06	LSI 2364 ROM	UH1		
8 8	12		901453-03	LSI 2114 RAM	UC4, UC5, UD4, UD5, UE4, UE5, UF4, UF5		
- 1 -	13		901483-04	LSI 6530 PIA	UK3		
1 1	14		901523-01	IC LM555 TIMER	UM2		
1 1	15		901523-10	IC LF 353	UN3		
3 3	16		901524-01	IC MC3446 BUS INTERFACE	UB1, UB2, UD2		
1 1	17		901502-01	IC MC4066 CMOS, SWITCH	UN4		
1 1	18		901521-03	IC 74LS08	UR1		
4 4	19		901521-01	IC 74LS00 QUAD NAND	UB4, UD6, UH6, UJ2		
4 4	20		901521-21	IC 74LS02 QUAD NOR	UA1, UF6, UH2, UP6		
1 1	21		901525-01	IC 74S04 HEX INVERTER	UA6		
2 2	22		901521-02	IC 74LS04 HEX INVERTER	UE6, UL2		
2 2	23		901522-06	IC 7406 HEX INVERTER BUFFER	UJ6, UN2		
1 1	24		901522-19	IC 7414 QUAD SCHMITT TRIGGER	UA2		
2 2	25		901521-17	IC 74LS42 1-OF-10 DECODER	UA3, UB3		
1 1	26		901521-06	IC 74LS74 DUAL D FLIP FLOP	UB5		
1 1	27		901521-15	IC 74LS133 13-INPUT NAND	UM5		
1 1	28		901521-25	IC 74LS153 DUAL 4-INPUT MUX	UA5		
6 7	29		901521-11	IC 74LS157 QUAD 2-INPUT MUX	UC3, UD3, UE3, UF3, UJ5 [3], UK5, UL5		
2 2	30		901521-28	IC 74LS164 SI PO REG	UN5, UP5		
1 1	31		901521-12	IC 74LS165 PI SO REG	UN6		
1 1	32		901522-16	IC 74190 UP/DOWN DEC COUNTER	UH5		
1 1	33		901521-33	IC 74LS163 UP/DOWN COUNTER	UC6		ITEM 36 MAY BE USED AS A SUBSTITUTE
1 1	34		901521-34	IC 74LS175 QUAD D FLIP FLOP	UB6		
2 2	35		901521-35	IC 74LS194 4-BIT UNIV. COUNTER	UA4, UM6		
S S	36		901521-36	IC 74LS161 COUNTER			UC6
1	37		901884-01	IC 6530 PIA	UK3		

commodore	TITLE: P.C.B. ASSY, FLOPPY, DIGITAL	DRWN BY: J. Polonus	DATE 12/15/81	ENGR:	DATE	SIZE C	8050002	REV P	5
		CHKD:	3/20/80	APPR:					

QUANTITY REQD PER PART / DASH NO. 03	02	-01	ITEM	DS	PART NUMBER	DESCRIPTION	REF DES	BEND	NOTES
1	1	1	38		902550-01	TRANSISTOR QUAD NPN, Q2T2222	UP3		
1	1	1	39		902658-01	TRANSISTOR 2N3904	Q1		
1	1	1	40		902707-01	TRANSISTOR 2N3906	Q2		
			41						
2	2	2	42		901528-04	VOLTAGE REGULATOR 7812 +12V/1.5A	VR1, VR2		
1	1	1	43		901528-01	VOLTAGE REGULATOR LM323 +5V/3A	VR3		
			44						
1	1	1	45		900556-03	CRYSTAL 12 MHz	Y1		
			46						
1	1	1	47		900755-02	RECTIFIER, FULL WAVE BRIDGE	CR1		ITEM 48 MAY BE USED AS A SUB.
S	S	S	48		900755-03	RECTIFIER, FULL WAVE BRIDGE			CR1
2	2	2	49		900753-01	DIODE 1N5402 3A / 200V	CR5, CR6		
3	3	3	50		900750-01	DIODE 1N4001 1A / 50 V	CR7, CR8, CR9		
1	1	1	51		900850-01	DIODE 1N4148	CR2		
49	49	49	52		900461-28	CAPACITOR, CERAMIC AXIAL .1μF	C1-6, C8-18, C21, C23-28, C35-48, C50, C55, C56, C59 THRU C66		
1	1	1	53		900462-44	200 pF	C51,		
1	1	1	54		900461-16	.01μF	C20		
1	1	1	55		900462-29	47 pF	C49		
2	2	2	56		900462-49	330 pF	C52, C53		
2	2	2	57		900463-04	CAPACITOR, CERAMIC AXIAL, 100 pF	C7, 58		
3	3	3	58	B	900110-07	CAPACITOR, LOW LEAK, ELEC 1μf 50V	C29, C31, C33		SEE ITEM 74 FOR SUBSTITUTE
1	1	1	59		900101-37	CAPACITOR, ELECTROLYTIC 47μF 16V	C34		
2	2	2	60		900109-03	CAPACITOR, LOW LEAK 10μF 20V	C19, C22		
2	2	2	61		900101-04	CAPACITOR, ELECTROLYTIC 10μF 25V	C30, C32		
1	1	1	63		901301-01	CHOKE RF SHIELDED 100 μH	L1		
			64						
2	2	2	65		901550-58	RESISTOR 1/4 W ±5% 470 Ω	R1, R2,		
1	1	1	66		901751-17	RESISTOR 1/4 W ±1% 7.15K Ω	R30		
1	1	1	67		901751-09	75 Ω	R18		
1	1	1	68		901751-18	100 Ω	R19		
1	1	1	69		901751-19	226 Ω	R17		
1	1	1	70		901751-20	RESISTOR 1/4 W ±1% 200 Ω	R51		
2	2	2	71		901550-01	RESISTOR 1/4 W ±5% 1K Ω	R20, 36		
2	2	2	72		901550-03	RESITOR 1/4 W ±5% 5.1K Ω	R3, R4		
1	1	1	73		901550-07	RESISTOR 1/4 W ±5% 100K Ω	R9		
S	S	S	74	B	900101-35	CAP, ELECTROLYTIC 1μf 25V			SUBSTITUTE FOR ITEM 58. C29 C31, C33

commodore	TITLE: P.C.B. ASSY, FLOPPY, DIGITAL	DRWN BY: J. Solomon	DATE 12/16/77	ENGR:	DATE	SIZE B	8050002	REV P	6
		CHKD:	3/30/79	APPR:					

QUANTITY REQD PER PART/ DASH NO. 03	02	-01	ITEM	DS	PART NUMBER	DESCRIPTION	REF DES	BEND	NOTES
1	1	1	75	B	901550-99	RESISTOR 1/4 W ±5% 43K Ω	R29		
4	4	4	76	B	901550-18	2.2K Ω	R50,R32,R47,R37		
5	5	5	77	B	901550-20	10K Ω	R8,R23,R24,R25,R49		
7	7	7	78	B	901550-53	2K Ω	R15,R16,R7,R21,R35,R53,R52,		
4	4	4	79	B	901550-75	120 Ω	R45,R12,R13,R14,		
2	2	2	80	B	901550-85	2.4K Ω	R5,R6		
1	1	1	81	B	901550-26	15K Ω	R22		
			82						
1	1	1	83	B	901550-06	33K Ω	R27		
1	1	1	84	B	901550-23	2.7K Ω	R26		
1	1	1	85	B	901550-95	RESISTOR 1/4 W ±5% 82K Ω	R28		
2	2	2	86	B	901550-31	RESISTOR 1/4 W ±5% 680 Ω	R48,R33		
			87						
3	3	3	88	B	904150-04	IC SOCKET 24 PIN	XUH1,XUK6,XUL1.		ITEM 90 MAY BE USED AS A SUB.
6	6	6	89	B	904150-06	IC SOCKET 40 PIN	XUC1,XUE1,XUH3,XUK3,XUM3,XUN1		ITEM 91 MAY BE USED AS A SUB.
5	5	5	90	B	904153-03	IC SOCKET 24 PIN			
5	5	5	91	B	904153-05	IC SOCKET 40 PIN			
1	1	1	92	B	903206-01	CONNECTOR RT ANGLE IEEE-488	P1		
1	1	1	93	B	903344-10	HEADER DUAL IN LINE, 20 PIN .100 SPACE.	P2		
1	1	1	94	B	903316-05	HEADER .156 CENTER 5 PIN	P3		
1	1	1	95	B	903316-03	HEADER .156 CENTER 3 PIN	P4		
1	1	1	96	B	903316-06	HEADER .156 CENTER 6 PIN	P4		
1	1	1	97	B	903326-06	HEADER .100 CENTER 6 PIN	P5		
			98						
1	1	1	99	C	320268-01	HEAT SINK			
AR	AR	AR	100	B	904907-01	HEAT SINK COMPOUND THERMAL			
			101						
6	6	6	102	B	906403-19	RIVET DOME HEAD OPEN END			
2	2	2	103	B	906403-03	RIVET DOME HEAD OPEN END			
			104						
AR	AR	AR	105	B	320176-05	WIRE JUMPER 22 GA	E1, E3		
1	1	1	106		900462-41	CAPACITOR, CERAMIC, COG, AXIAL, 150 pf	C67		
1	1	1	107	B	900010-17	CAPACITOR, CERAMIC, UNCRIMPED, DISC, 100pf, 50V	C68		

commodore	TITLE: P.C.B. ASSY, FLOPPY, DIGITAL	DRWN BY:	DATE	ENGR:	DATE	SIZE		REV	
			12/1/87			B	8050002	P	7
		CHKD:	3/6/87	APPR:	3/6/87				

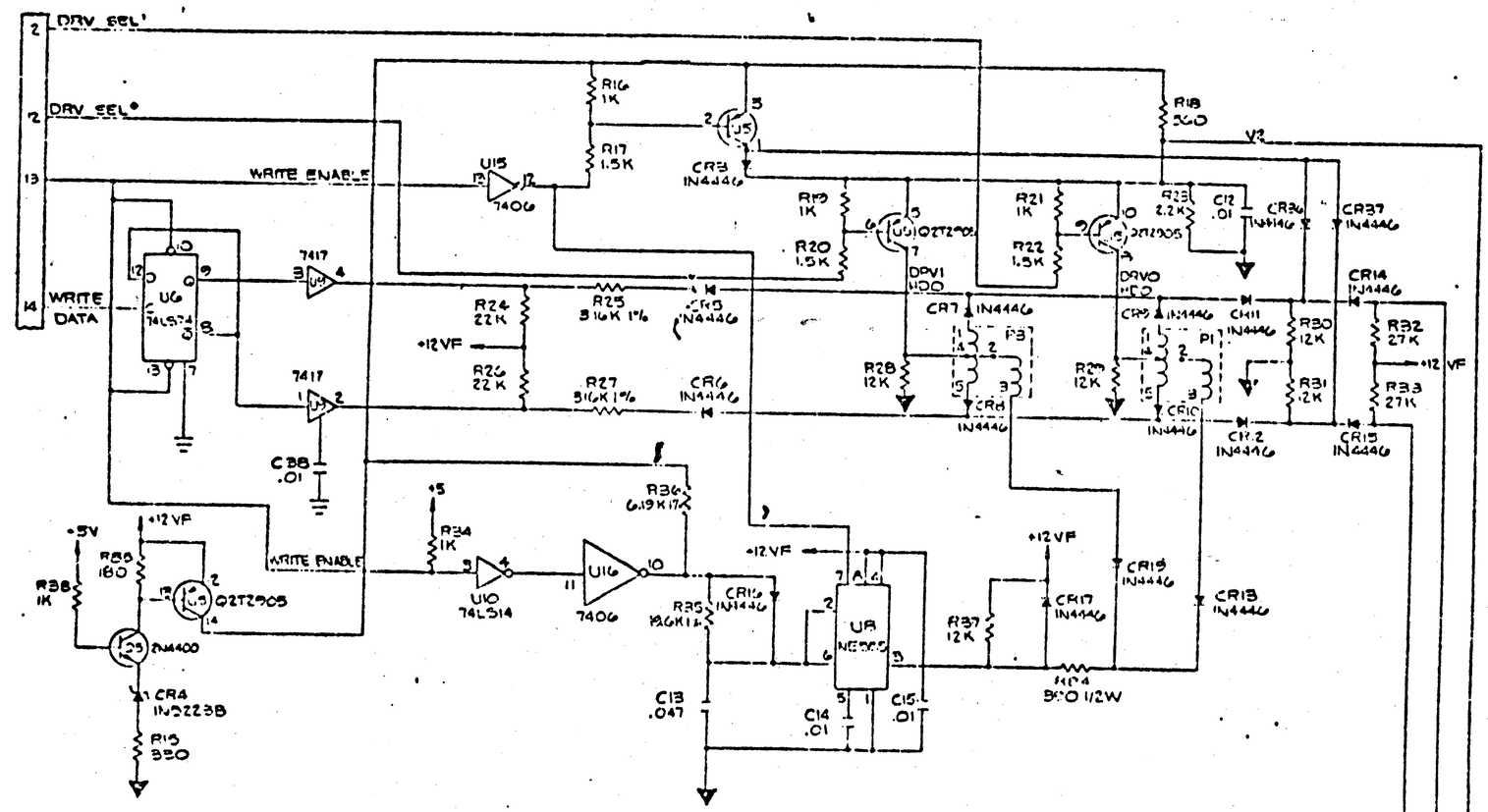

LTR	ZONE	REVISIONS	DATE	APPROVED
A		PROTO		
B		REV PER ECO 1831		
C		REV PER ECO 1907		

2. ALL CAPACITOR VALUES ARE IN MICROFARADS AND ARE 50 V.C.

1. ALL RESISTOR VALUES ARE IN OHMS AND ARE 1/4 WATT.

NOTES-UNLESS OTHERWISE SPECIFIED

1

commodore

ANALOG

8050 C

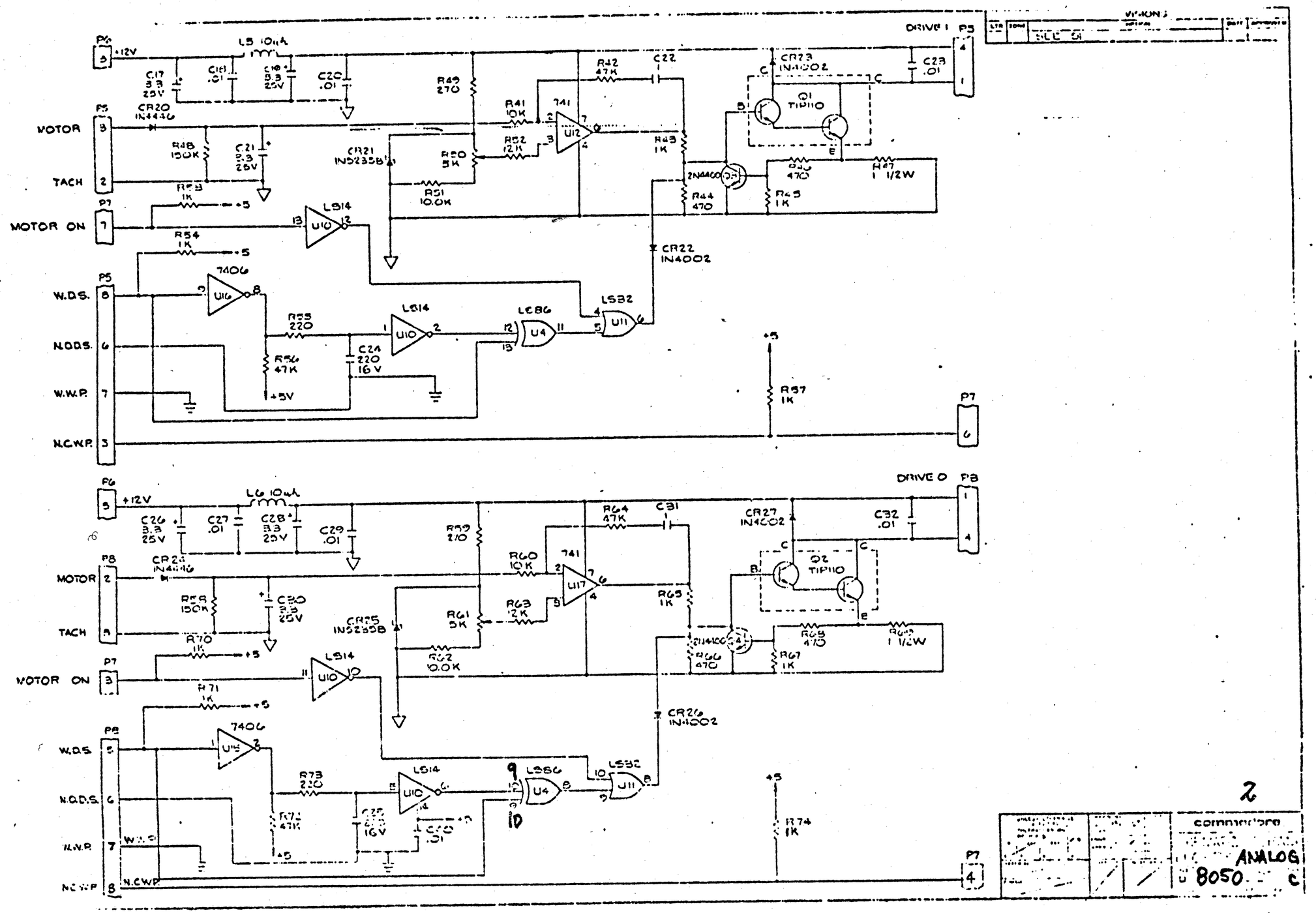
DRIVE 1
P5
P6
+12V
L5 10uH
C17 3.3 25V
C18 .01
C19 3.3 25V
C20 .01
R49 270
R42 47K
C22
CR23 IN4002
C23 .01
Q1 TIP110
R41 10K
741
U12
R52 12K
R43 1K
2N4400
R46 470
R47 1 1/2W
R45 1K
R44 470
CR20 IN4446
MOTOR
TACH
R48 150K
C21 3.3 25V
CR21 IN5235B
R50 5K
R51 10.0K
R53 1K
+5
P7
MOTOR ON
LS14
U10
R54 1K
CR22 IN4002
7406
U16
W.D.S.
N.D.D.S.
W.W.P.
N.C.W.P.
R55 220
R56 47K
C24 220 16V
+5V
LS86
U4
LS32
U11
R57 1K
DRIVE 0
P8
C26 3.3 25V
C27 .01
C28 3.3 25V
C29 .01
L6 10uH
R59 270
R64 47K
C31
CR27 IN4002
C32 .01
Q2 TIP110
R60 10K
U17
R63 12K
R65 1K
CR24 IN4446
R58 150K
C30 3.3 25V
CR25 IN5235B
R61 5K
R62 10.0K
R66 470
R68 470
R69 1 1/2W
R67 1K
R70 1K
R71 1K
CR26 IN4002
R73 220
R72 47K
C25 220 16V
C30 .01
R74 1K
W.D.S.
N.D.D.S.
W.W.P.
N.C.W.P.
commodore
ANALOG
8050
C
2

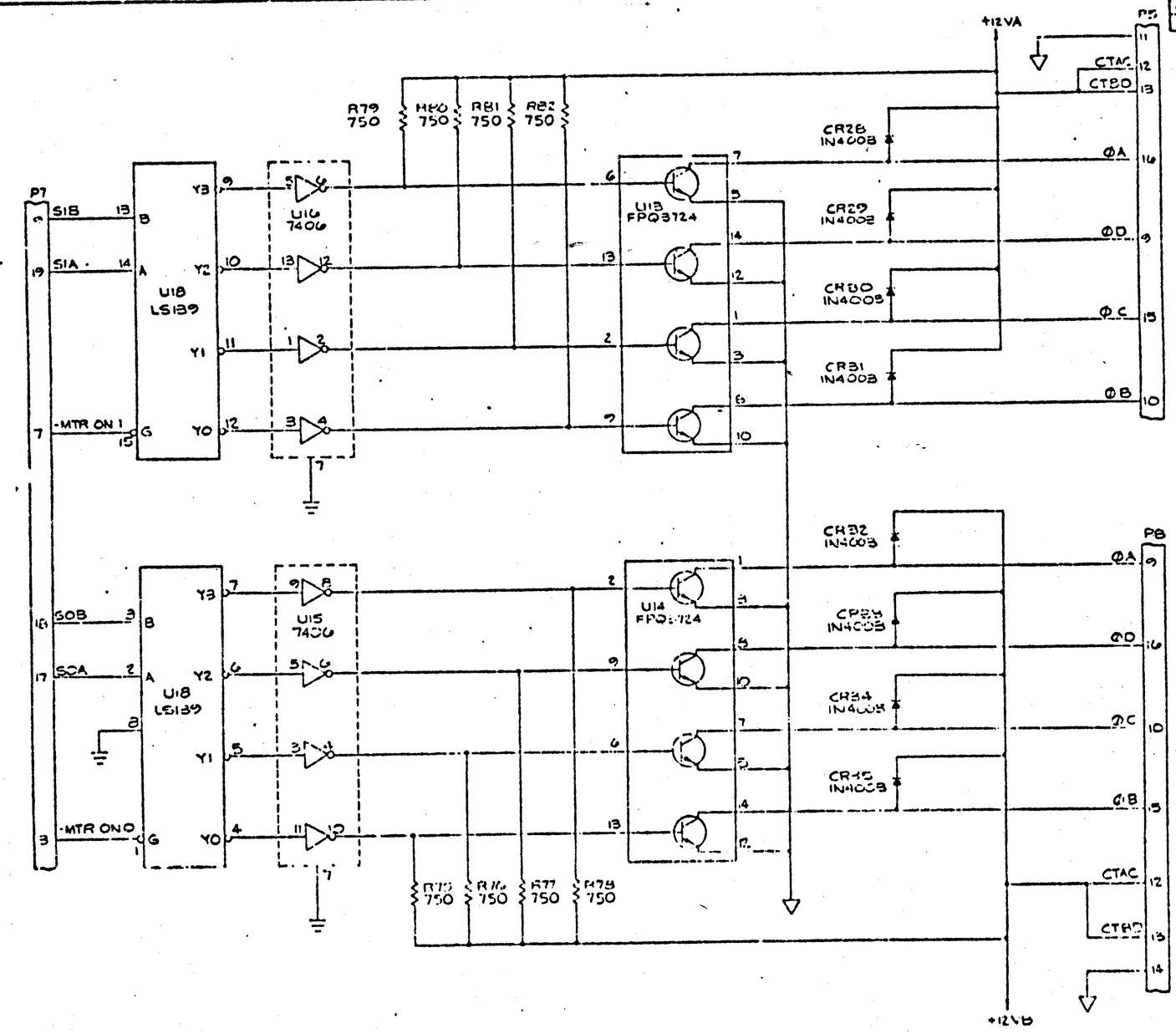

3

commodore

ANALOG

8050

C

REVISIONS				
LTR	ZONE	DESCRIPTION	DATE	APPROVED
A		PRODUCTION RELEASE	3/4/80	
B		REV PER ECO 1833	8-28-80	
C		REV PER ECO 1907	11/7/80	
D		REV PER ECO 2020	3/4/81	
E		REV PER ECO 2026	3/5/81	
F		REV PER ECO 2077	1/7/81	

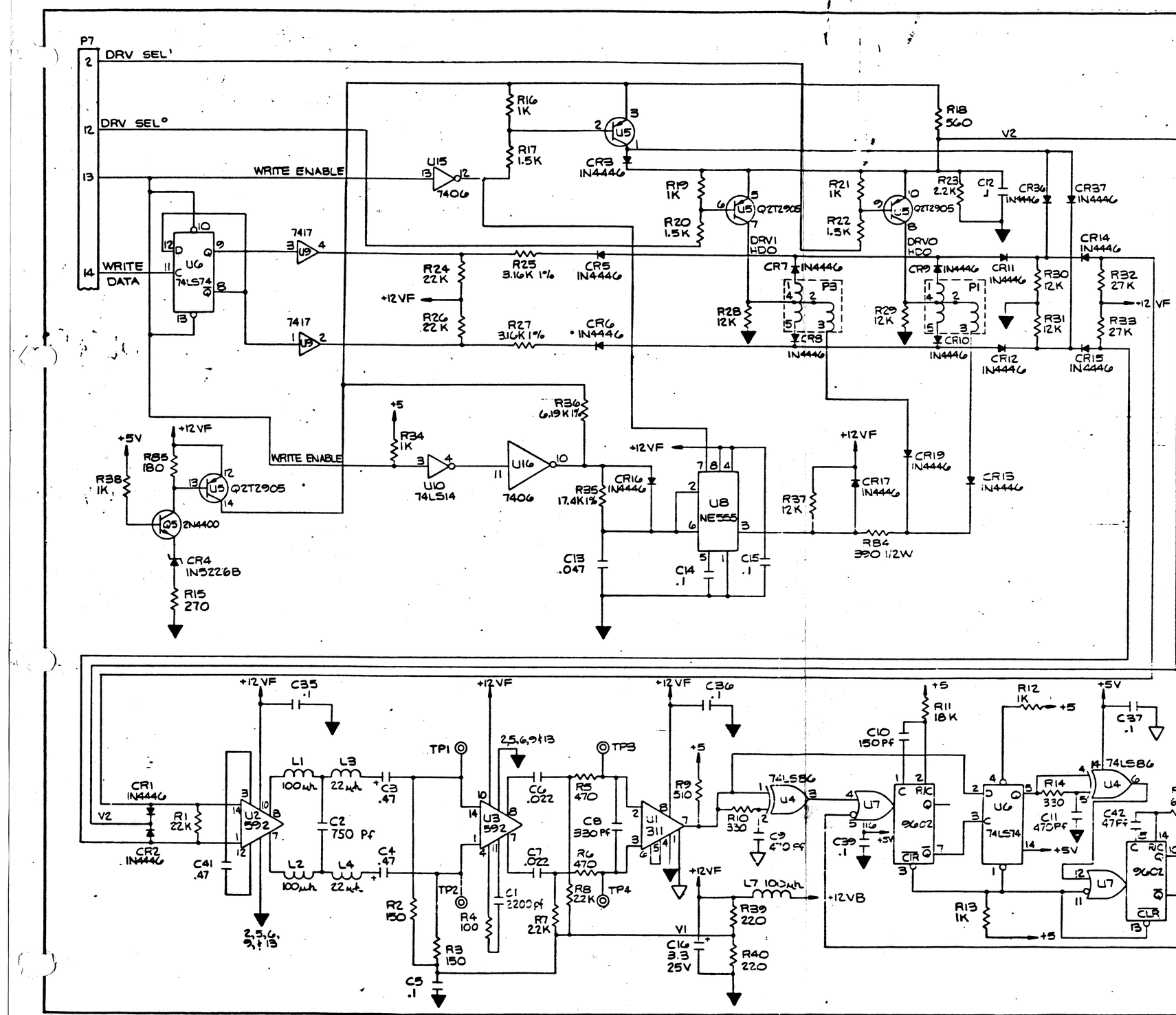

2. ALL CAPACITOR VALUES ARE IN MICROFARADS AND ARE 50 VDC.

1. ALL RESISTOR VALUES ARE IN OHMS ±5% & ARE 1/4 WATT.

NOTES-UNLESS OTHERWISE SPECIFIED:

commodore

SCHEMATIC DIAGRAM FLOPPY ANALOG

SIZE D 8050005 REV F

SCALE NONE SHEET 2

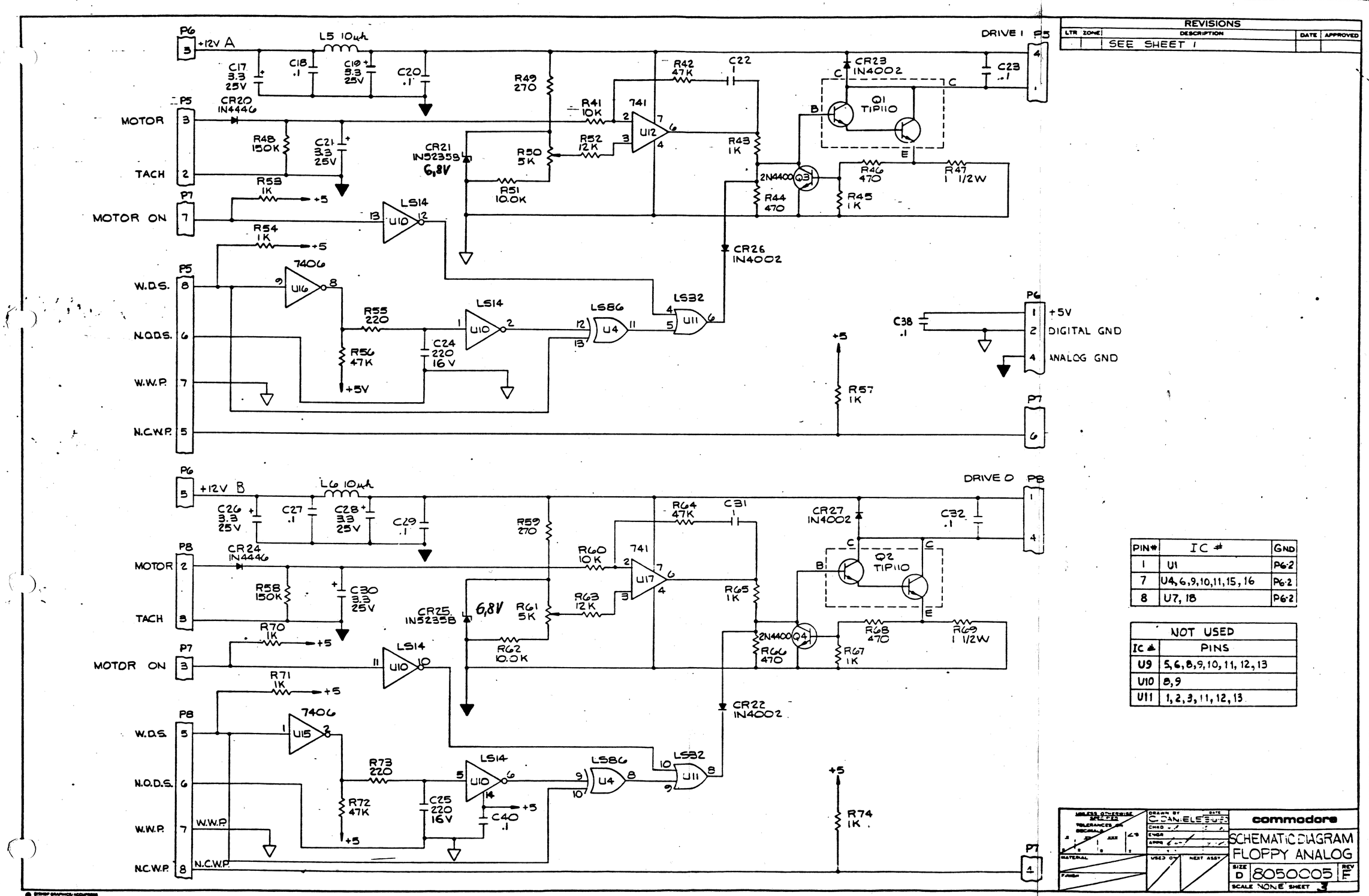

REVISIONS				
LTR	ZONE	DESCRIPTION	DATE	APPROVED
		SEE SHEET 1		

PIN#	IC #	GND
1	U1	P6-2
7	U4, 6, 9, 10, 11, 15, 16	P6-2
8	U7, 18	P6-2

NOT USED	
IC #	PINS
U9	5, 6, 8, 9, 10, 11, 12, 13
U10	8, 9
U11	1, 2, 3, 11, 12, 13

commodore

SCHEMATIC DIAGRAM
FLOPPY ANALOG

SIZE D 8050005 REV F

SCALE NONE SHEET 3

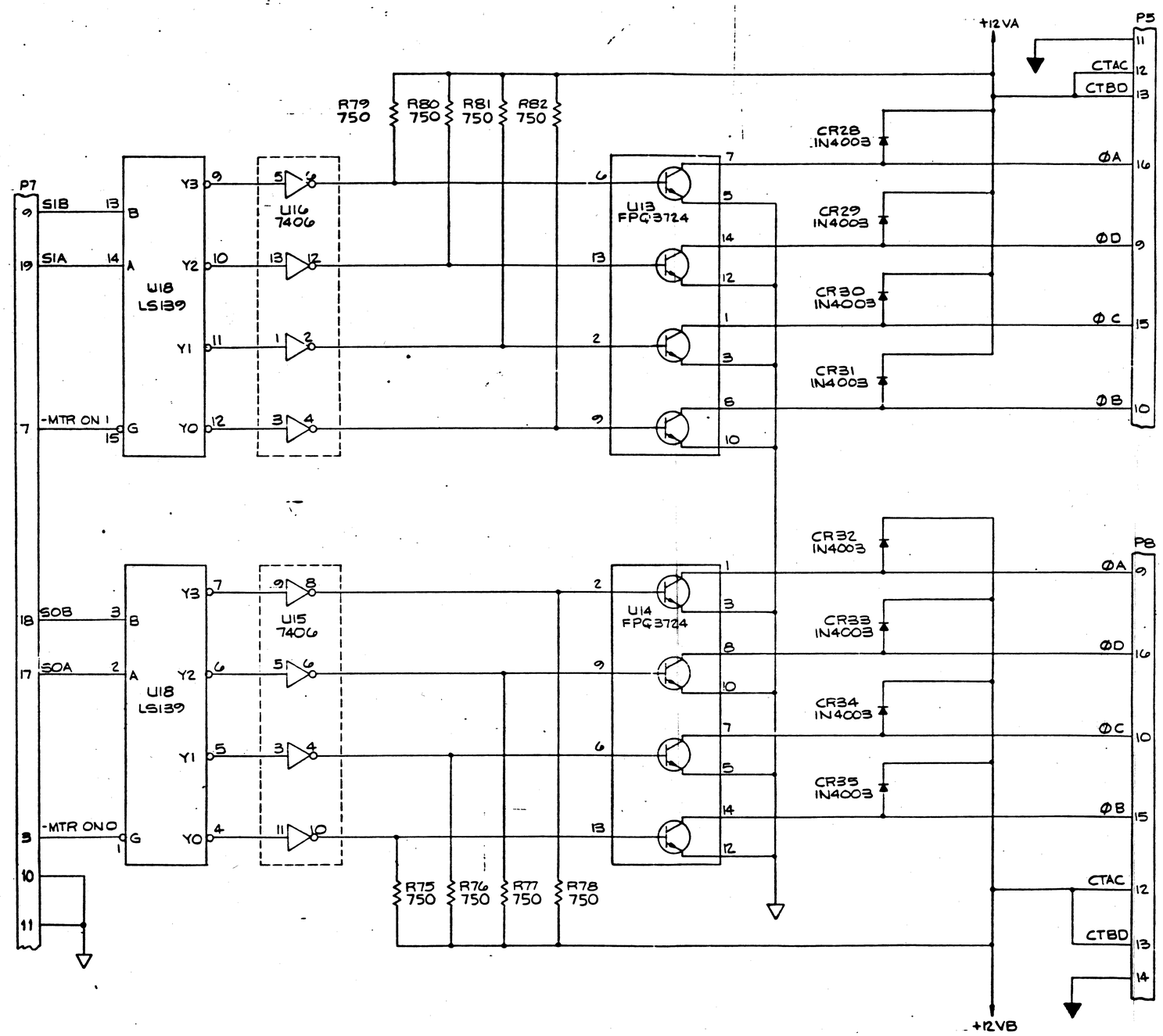

REVISIONS				
LTR	ZONE	DESCRIPTION	DATE	APPROVED
		SEE SHEET 1		

commodore

SCHEMATIC DIAGRAM
FLOPPY ANALOG

SIZE D 8050005 REV F

SCALE NONE SHEET 4

REVISIONS				
LTR	ZONE	DESCRIPTION	DATE	APPROVED
		SEE SHT #1		

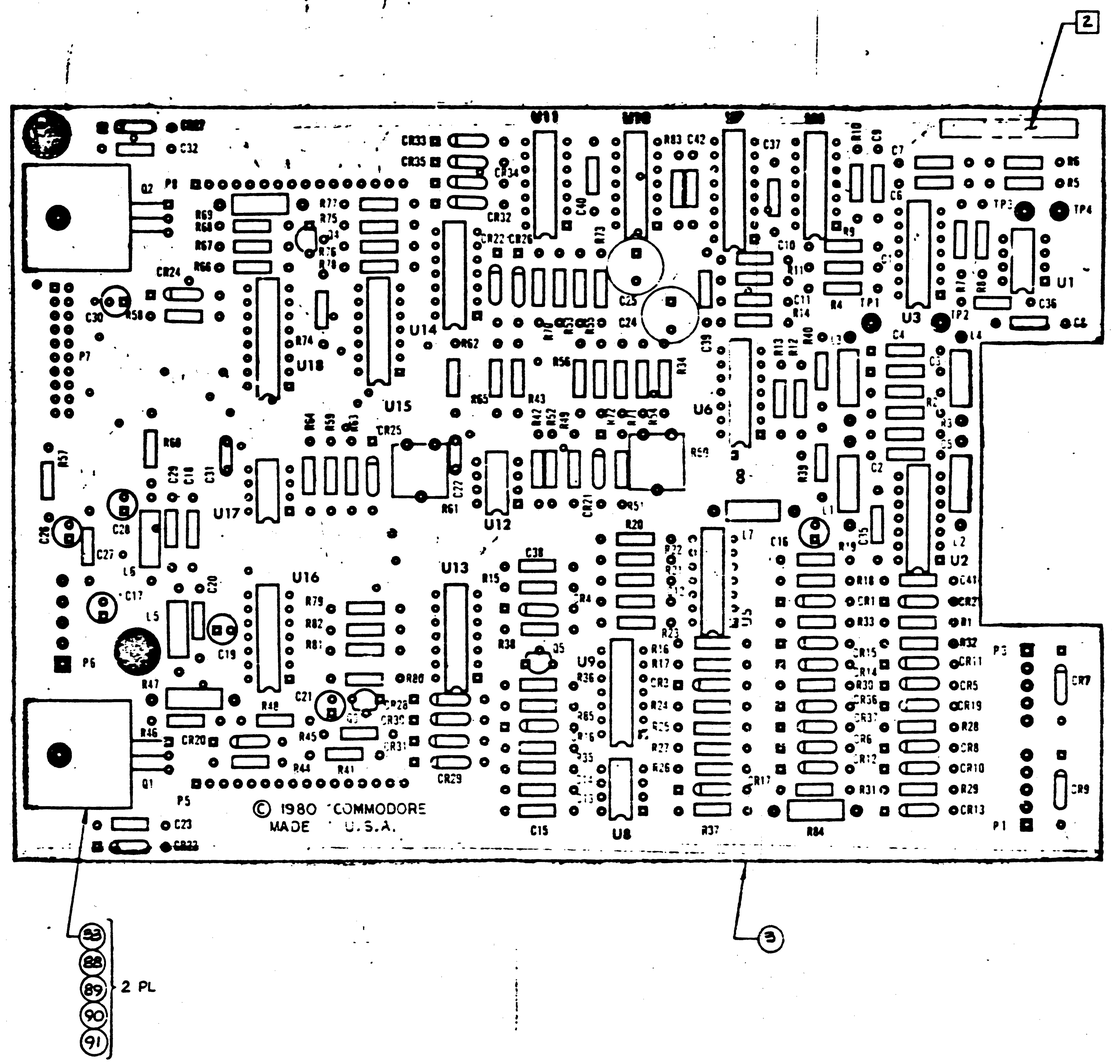

-01 SHOWN

UNLESS OTHERWISE SPECIFIED TOLERANCES ON DECIMALS .X ±.1 .XX ±.03 .XXX ±.010 ∠ ±°	DRAWN BY J. AVES 3-1-83	commodore
MATERIAL	USED ON FLOPPY 3030	NEXT ASSY 3050011
FINISH		SIZE D 8050006 REV H
		SCALE 2:1 SHEET 1

P.C.B. ASSY, FLOPPY ANALOG

QUANTITY REQD PER PART / DASH NO. 01	ITEM	DS	PART NUMBER	DESCRIPTION	REF DES	BEND	NOTES
REF	1		8050005	SCHEMATIC-FLOPPY ANALOG			
	2						
1	3		8050007	PCB- FLOPPY ANALOG			
	4						
16	5		900461-23	CAP, CER, Z5U .1 µf, 50V, +80-20	C12,14,15,18,20,23,27,29,32,35-40,C5		
1	6		900462-29	COG 47 pf ± 5 %	C42		
1	7		900463-10	X7R 330pf ± 10 %	C8		
2	8		900463-12	X7R 470pf 10%	C9,11		
1	9		900462-58	COG 750 Pf ±5%	C2		
2	10		900463-32	X7R, .022µf 10%	C6,7		
1	11		900017-01	COG, .047µf ± 5%	C13		
1	12		900462-69	COG 2200 pf 50V ±5%	C1		
3	13		900464-36	CER Z5U .47µf 50V ±20%	C3,4,41		
2	14		900020-05	MONOLITHIC 1µf 50V ± 10%	C22,31		
2	15		900100-18	ELECTROLYTIC, 220µf 16V $^{+10}_{-50}$%	C24,25		
1	16		900462-41	CER, COG 150 pf 50V, 10%	C10		
7	17		900402-11	CAP, DIPPED TANT, 3.3µf, 25V, 5%	C16,17,19,21,26,28,30		
	18						
	19						
4	20		900750-02	DIODE IN4002	CR22,23,26,27		ITEM 25 MAY BE USED AS A SUBSTITUTE
8	21		900750-03	IN4003	CR28-35		
21	22		900850-17	IN4446	CR1-3,5-17,19,20,24,36,37		
1	23		900948-06	IN5226B	CR4		
2	24		900948-15	DIODE IN5235B	CR21,25		
5	25		900750-05	DIODE IN4005			
	26						
2	27		901301-05	CHOKE RF SHIELDED 10µh	L5,6		
3	28		901301-01	CHOKE RF SHIELDED 100µh	L1,2,7		
2	29		901301-06	CHOKE RF SHIELDED 22µh	L3,4		
	30						
	31						
3	32		902653-03	TRANSISTOR 2N4400	Q3,4,5		
2	33		902742-01	TRANSISTOR TIP110	Q1,2		
	34						
	35						
	36						
	37						

commodore	TITLE: FLOPPY ANALOG	DRWN BY: ML Kirsky	DATE	ENGR:	DATE	SIZE B	8050006	REV H	SHT 5
		CHKD:		APPR:					

QUANTITY REQD PER PART / DASH NO. 01	ITEM	DS	PART NUMBER	DESCRIPTION	REF DES	BEND	NOTES
2	38		901600-36	RES, FIXED, 1Ω, 1/2 W, 5%	R47,69		
1	39		901550-49	100Ω, 1/4 W, 5%	R 4		
2	40		901550-89	150Ω	R2,3		
1	41		901550-100	180Ω	R85		
4	42		901550-52	220Ω	R39,40,55,73		
3	43		901550-76	270Ω	R49,59,15		
	44						
2	45		901550-14	330Ω, 1/4 W	R14 & 10		
1	46		901600-37	390Ω, 1/2 W	R84		
6	47		901550-58	470Ω, 1/4 W	R5,6,44,46,66,68		
1	48		901550-38	510Ω	R9		
1	49		901550-30	560Ω	R18		
8	50	B	901550-88	750Ω	R75-82		
17	51		901550-01	1K	R12,13,16,19,21,34,38,43,45,53,54,57,65,67,70,71,74		
3	52		901550-69	1.5K	R17,20,22		
3	53		901550-18	2.2K 5%	R7,8,23		
2	54		901751-21	3.16K 1%	R25,27		
1	55		901751-22	6.19K 1%	R36		
4	57		901550-20	10K 5%	R41,51,60,62		
7	58		901550-11	12K 5%	R28-31,37,52,63		
1	59		901550-55	18K 5%	R11		
1	60		901751-40	17.4 K 1%	R35		
3	61		901550-12	22K 5%	R1,24,26		
2	62		901550-15	27K	R32,33		
4	63		901550-22	47K	R42,56,64,72		
2	64		901550-16	RES, FIXED, 150K, 1/4 W, 5%	R48,58		
1	65		901550-04	RES. FIXED. 6.8K, 1/4 W, 5%	R83		
2	66		902262-03	POTENTIOMETER, 5K	R50,61		
	67						
	68						
2	69		901523-08	IC 592	U2,3		
1	70		901523-04	311	U1		
2	71		901523-11	741	U12,17		
1	72		901510-01	9602	U7		
1	73		901523-01	IC NE555	U8		
	74						
	75						

commodore	TITLE: FLOPPY ANALOG	DRWN BY: MIL KERSEY	DATE	ENGR:	DATE	SIZE B	8050006	REV H	SHT 6
		CHKD:		APPR:					

QUANTITY REQD PER PART / DASH NO. 01	ITEM	DS	PART NUMBER	DESCRIPTION	REF DES	BEND	NOTES
2	76		901522-06	IC 7406	U15,16		
1	77		901521-30	74LS14	U10		
1	78		901522-01	7417	U9		
1	79		901521-31	74LS32	U11		ITEM 86 MAY BE USED AS A SUBSTITUTE
1	80		901521-06	74LS74	U6		ITEM 87 MAY BE USED AS A SUBSTITUTE
1	81		901521-32	74LS86	U4		ITEM 83 MAY BE USED AS A SUBSTITUTE
1	82		901521-18	IC 74LS139	U18		
S	83		901522-18	IC 7486			U4
1	84		902551-01	TRANSISTOR PACK Q2T2905	U5		
2	85		902552-01	TRANSISTOR PACK FPQ3724	U13,14		
S	86		901522-29	IC 7432			U11
S	87		901522-22	IC 7474			U6
2	88		902905-01	HEAT SINK	Q1,2		
2	89		906610-03	SCREW 6-32/3/8			
2	90		905650-04	WASHER LOCK			
2	91		905950-02	NUT 6-32 HEX			
	92						
	93						
1	94		903344-10	HEADER DUAL ROW 20 PIN	P7		
2	95		903343-16	HEADER RT ANGLE 16 PIN	P5,8		
1	96		903316-05	HEADER ASSY 5 PIN	P6		
2	97		903333-05	HEADER, STR. POST 5 PIN	P1, P3		

commodore	TITLE: FLOPPY ANALOG	DRWN BY: M L KELSEY	DATE	ENGR:	DATE	SIZE B	8050006	REV H	SHT 7
		CHKD:		APPR:					

REVISIONS					
A	PRODUCTION RELEASE				
B	REVISED PER ECO 2059				
C	REVISED PER ECO 2131				

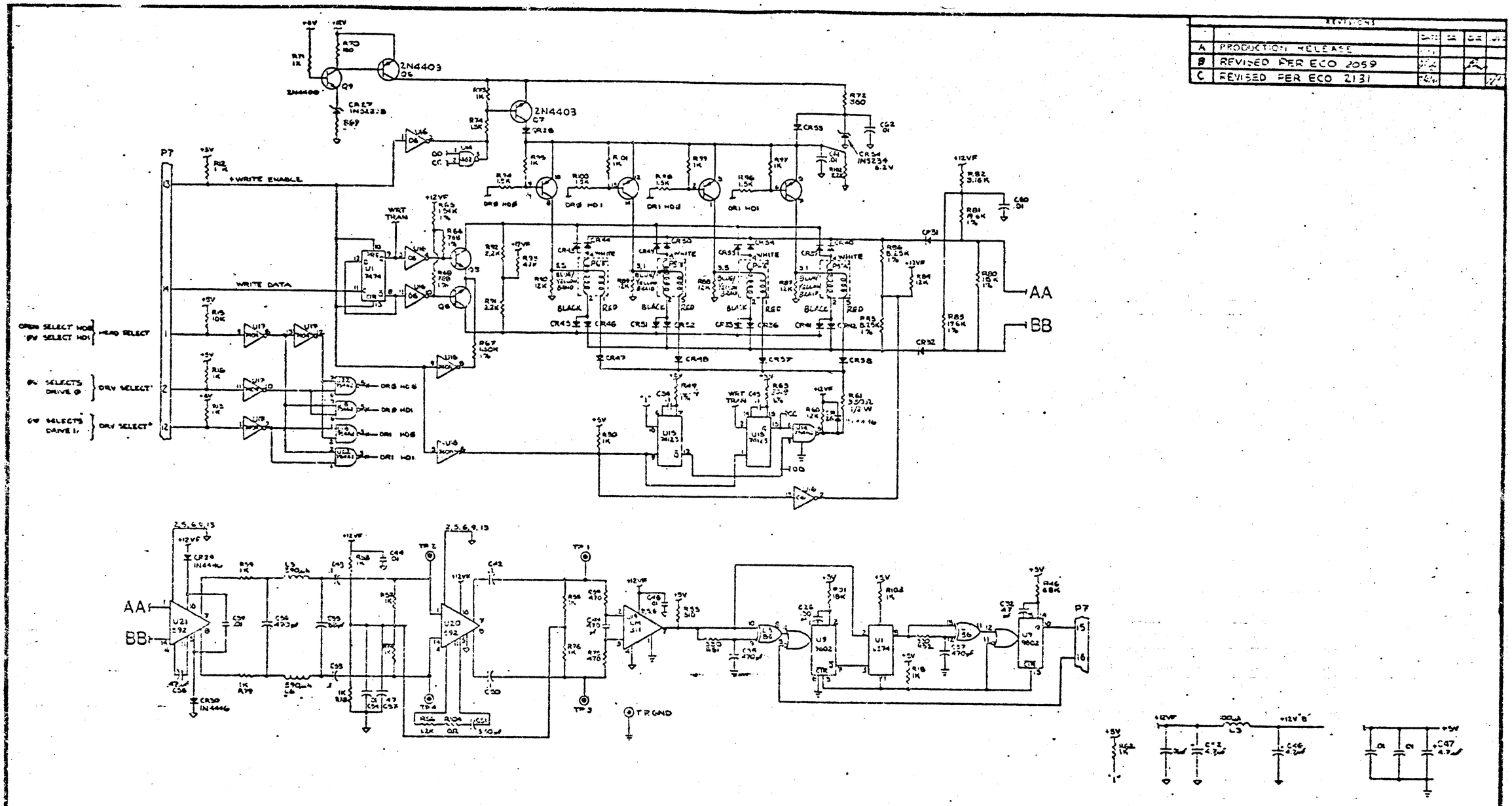

NOTES: UNLESS OTHERWISE SPECIFIED

commodore

SCHEMATIC
DUAL ANALOG PWG

D 8050042 C

SCALE SHEET 1-3

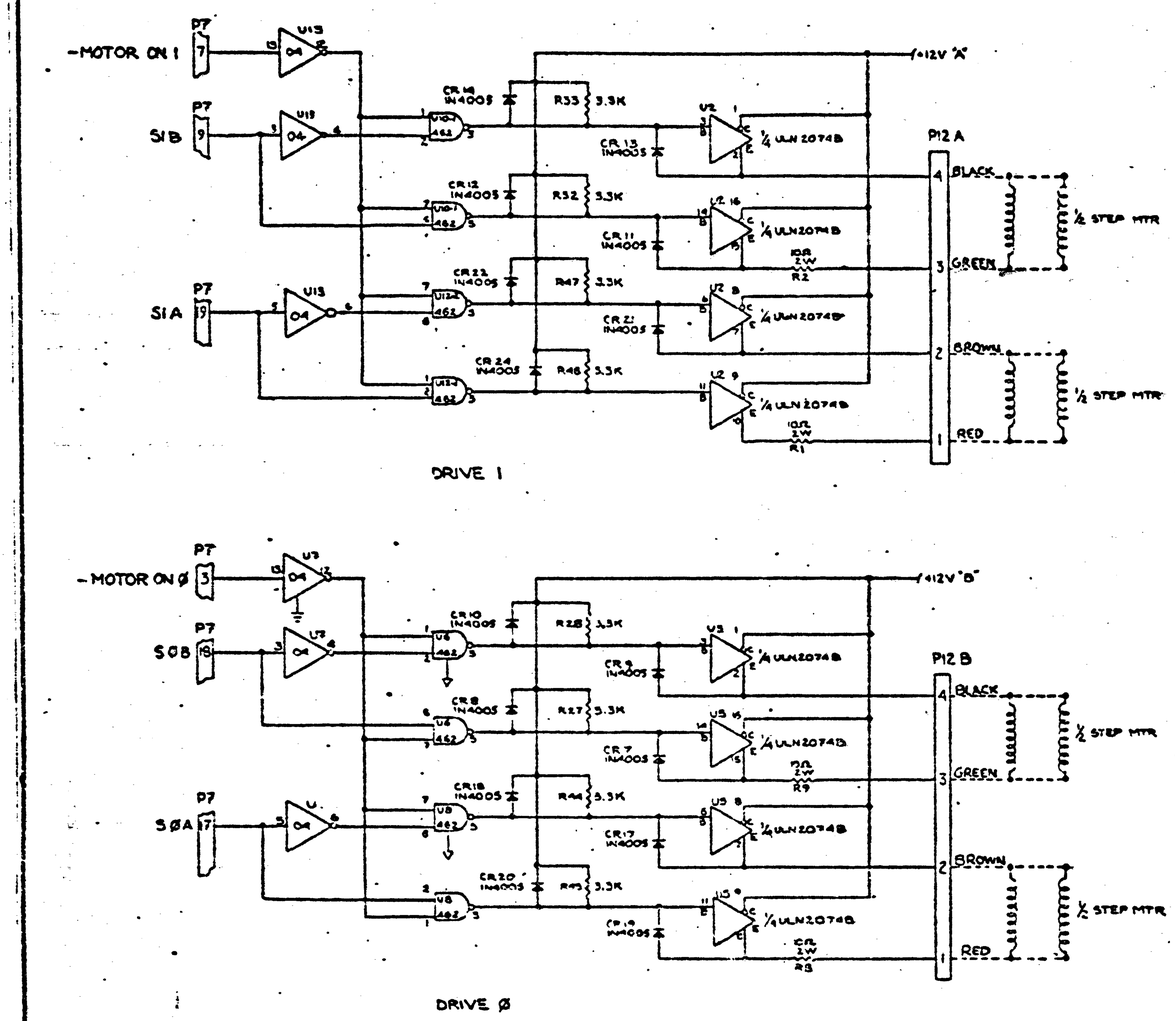

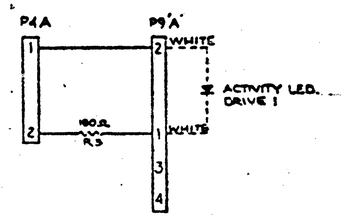

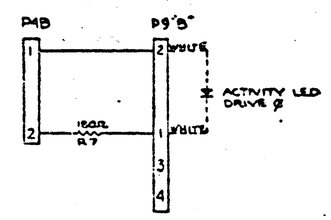

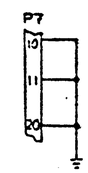

REV					
A	[illegible]				

commodore

SCHEMATIC
DUAL ANALOG PWB

D 8050042 1 C

SCALE SHEET 2-3

REV	REVISIONS	DATE	DR	CHK	APPR

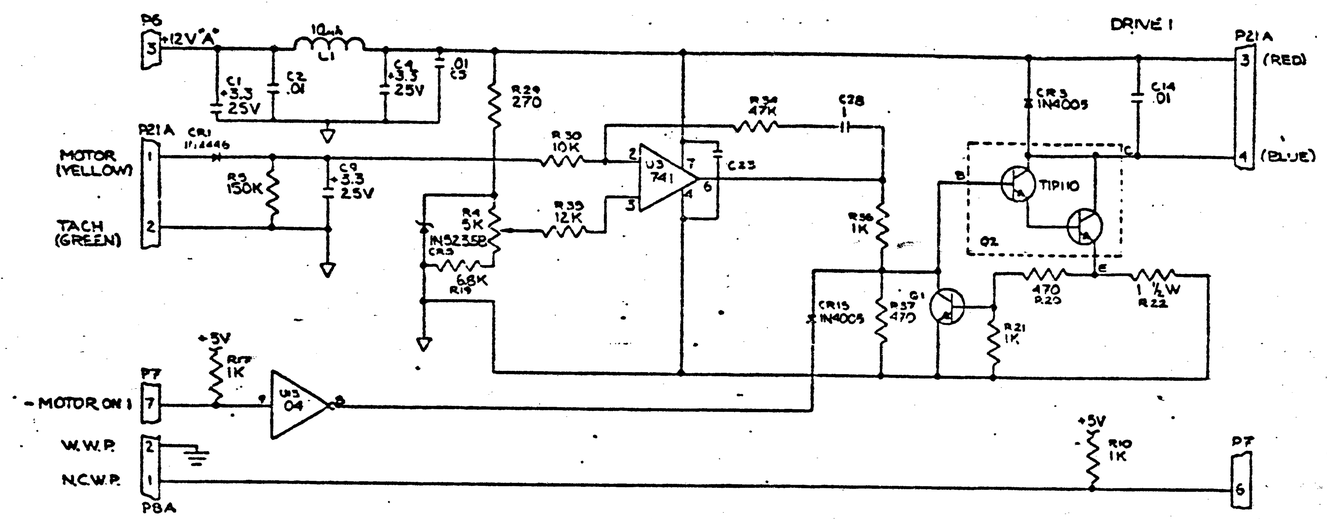

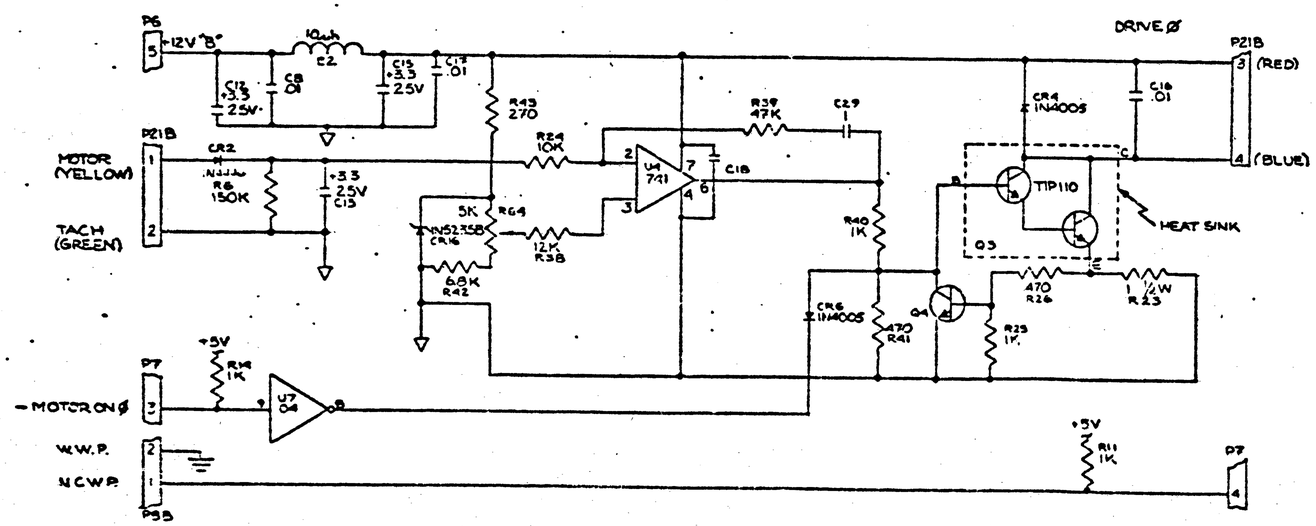

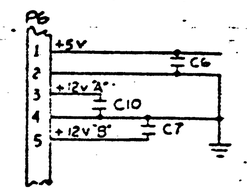

commodore

SCHEMATIC
DUAL ANALOG PWG

D 8050042 C

SCALE SHEET 2-3

BOARD LAYOUT
PCB ASSEMBLY #8050044

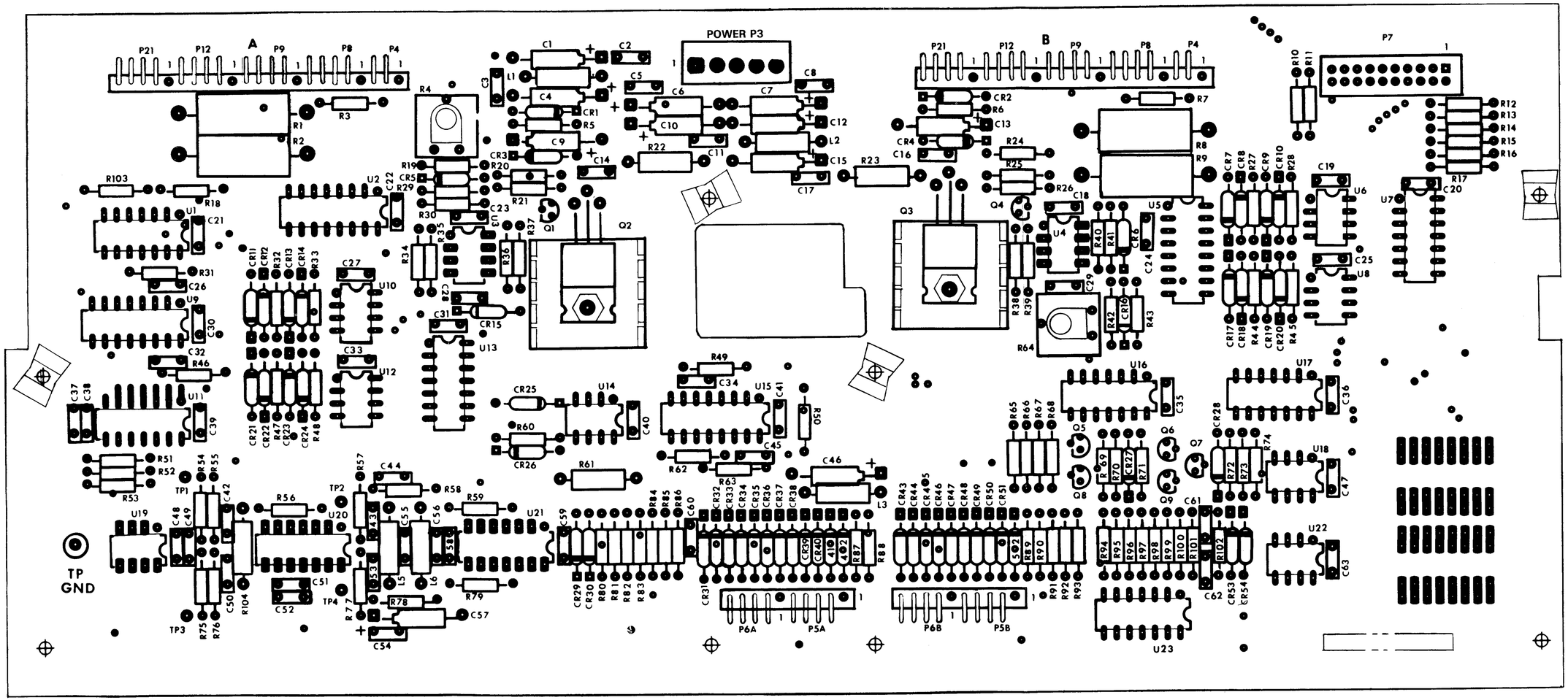

REVISIONS				
		SEE SHT 1		

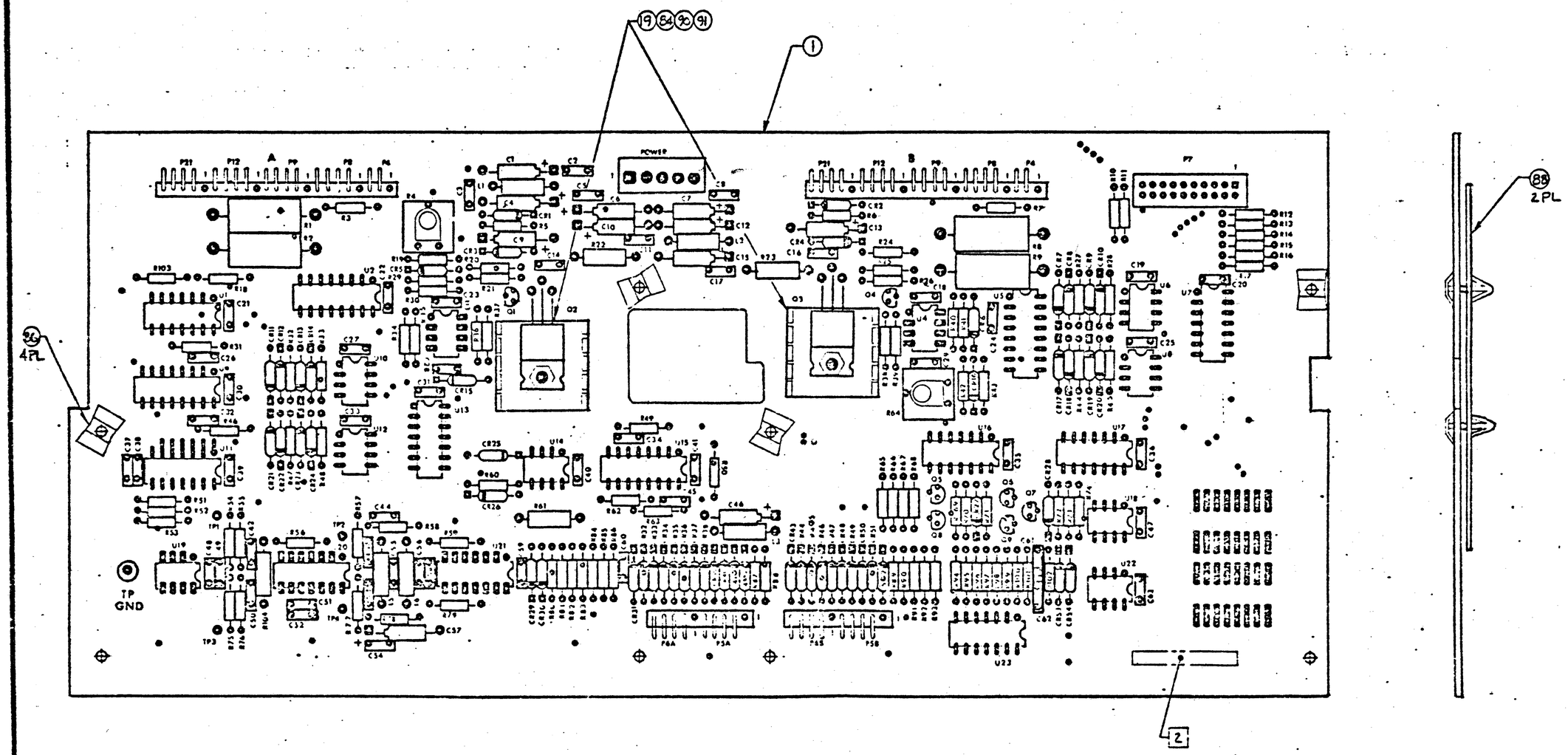

-01 SHOWN

commodore	
8050 Tandon DUAL ANALOG PWB	
D	8050044 C
SCALE	SHEET 5-5